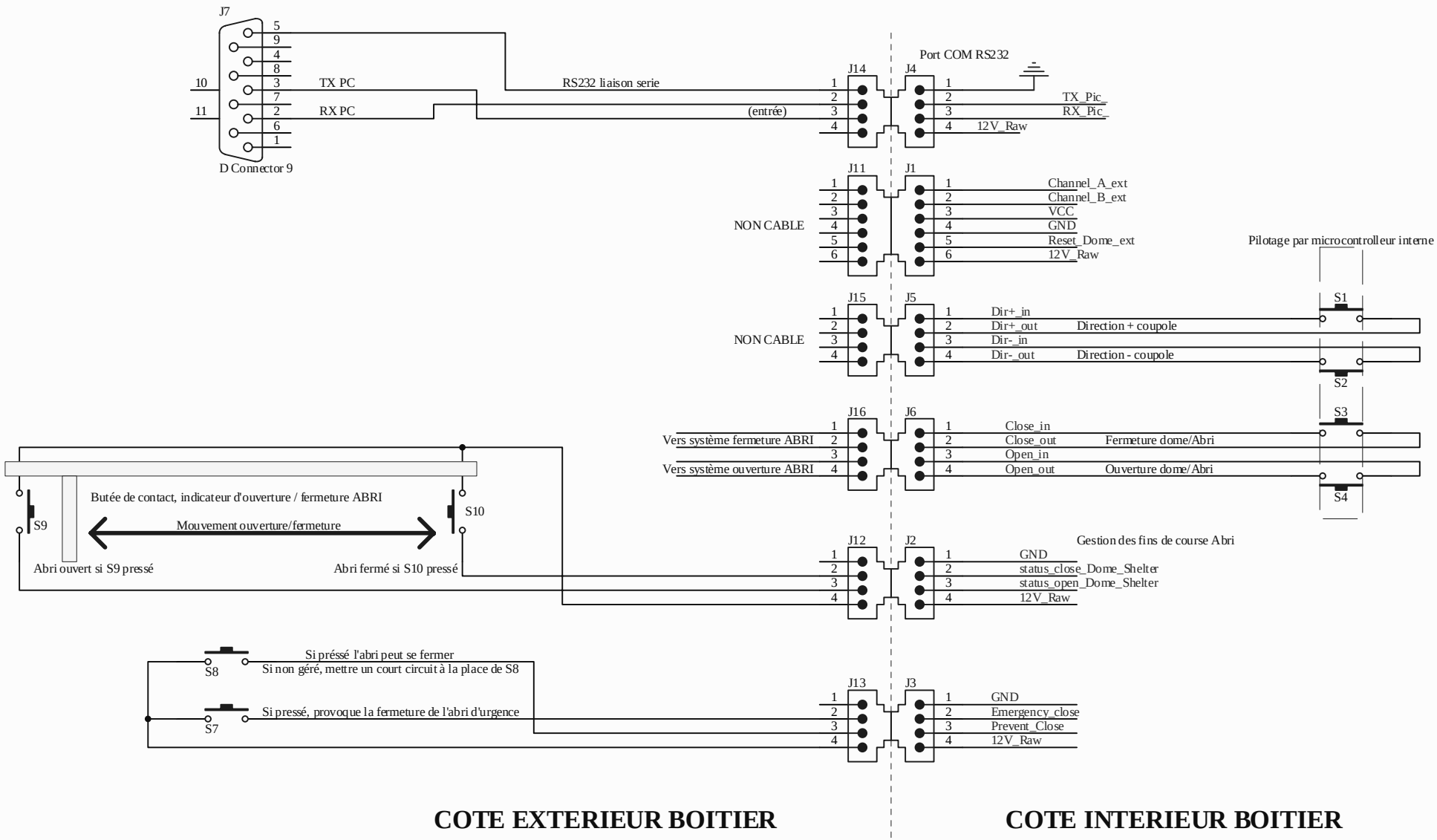

COTE EXTERIEUR BOITIER

COTE INTERIEUR BOITIER

VERSION ABRI

Title		
Size A4	Number	Revision
Date: 10-01-2008		Sheet of
File: E:\Projets\..\Abri_interface.SchDoc		Drawn By: